BEFOUR

PROFESSIONAL HEALTHCARE SCALES

Powered by: Opti-Height

Optical Stadiometer System

MODEL MX977 - THE EXAM ROOM SCALE

Befour's *PREMIER* physician scale - THE Exam Room Scale - offers every feature you'd want in a stationary patient scale, including Opti-Height Technology.



Opti-Height enables fast and accurate height measurements through state-of-the-art design and expert engineering. The 360° ergonomic hand grip and robust headpiece ensures the smoothest, simplest and safest height measurement process available in healthcare. The measurement slide encompasses S*mart Position Technology* meaning it 'stays put' where last left so height rod is always in the ready position for the next patient.

Stability, safety and technology are at the forefront of engineering. An innovative *'dual axis tip-proof'* design and integrated "active" handrail - which comes standard - provide unmatched safety. This free-standing, rock-solid, scale incorporates all-metal construction to deliver robust quality in a sleek, space-saving package.

THE Exam Room Scale features a 750 pound capacity, Befour's proprietary MotionLock technology, and ECO-Weigh power management system providing more than 100,000 weight readings on a single set of batteries.

All Befour scales are **built to last,** backed by an **'industry leading' 3-year warranty** and are **Made in the USA**

EMR READY

HANDS-FREE WEIGH

FEATURES & BENEFITS

Integrated "Active" Handrail: A STANDARD feature, allowing patients to grasp handrail for support while weight is accurately calculated

'Dual Axis Tip-Proof' Design: Unique, free-standing design eliminates all front-to-back and side-to-side tipping for unmatched stability and patient security

Display Console: LB/KG lockout, programmable settings, BMI output, auto zero, recall, reweigh ability, and more

***Optical* Height Measurement:** Simply lower the foldable headpiece to rest on top of head, press HEIGHT & measurement occurs instantaneously. Height can be viewed in selectable units and displays automatically

MOTIONLOCK

MotionLock automatically facilitates quick & accurate weight, even for the most unsteady user – no intervention of the care provider or patient required

ENVIRONMENTALLY FRIENDLY · PROUDLY MADE IN THE USA · CERTIFIED SBA SMALL BUSINESS



DISPLAY CONSOLE

Display is used across all Befour's medical scales: Seamlessly move from one model to another with ease

Displays weight, height, and BMI on a single screen

EMR connectivity via serial output or optional wireless module

Programmable User Settings can be set to auto-off, "Hands-Free" Weighing, etc.

'ECO Weigh' battery system provides 100,000 weighings per set of (4) D-cell alkaline batteries (included)

LB/KG Lockout: Toggle between or set to display only your desired unit of measure

3-segment battery life indicator

Large 1" LCD digits

No AC outlet or recharging needed

THE Exam Room Scale

MODEL MX977

SCALE SPECIFICATIONS

SCALE FOOTPRINT	16” W x 22” D x 46” H
PLATFORM DIMENSIONS	16” W x 18” D x 2” H
SYSTEM WEIGHT	41-44 lbs
WEIGHT CAPACITY	750 lbs (340 kg)
RESOLUTION	0.1 lb (0.05 kg)
ACCURACY	± 0.1 lb (0.05 kg)
POWER SOURCE	4 D-cell alkaline batteries (incl) *optional AC adapter available
BATTERY LIFE	100,000 weighings
CONNECTIVITY	USB serial or optional wireless
DISPLAY READOUT	1” LCD digits
HEIGHT ROD RANGE (MX977)	25-94” / (~63-238cm)
HEIGHT ROD ACCURACY (MX977)	± 0.1 in (0.2 cm)
HEIGHT DISPLAY FORMATS (MX977)	In, Ft & In, Cm
WARRANTY	3 years

SHIPPING SPECIFICATIONS

PACKAGED WEIGHT	~ 45-48 lbs
PACKAGE DIMENSIONS	~ Box (48 x 20” x 10”)
SHIPPING METHOD	UPS Package

DIMENSIONS

Schematic shown is for the MX977 (MX977L would have height rod on the LEFT side)

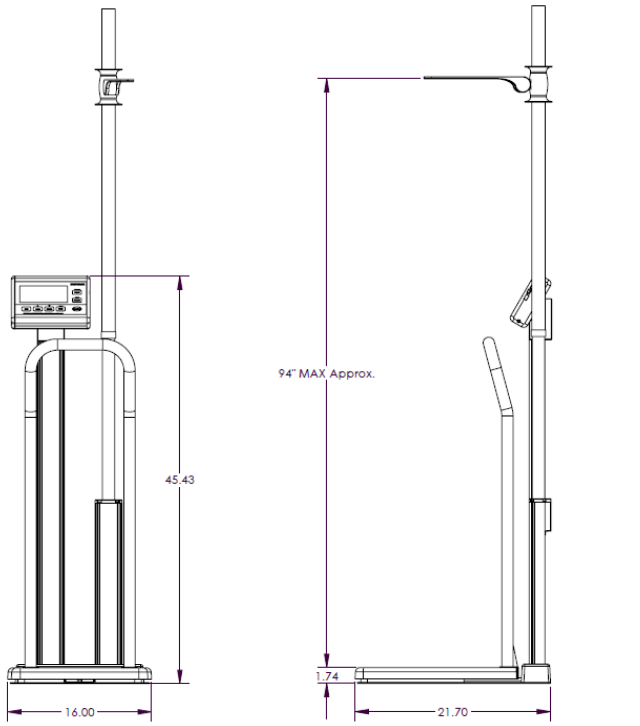

OPTI-HEIGHT DIGITAL HEIGHT ROD

Height rod is both digital and integrated into scale for automatic BMI calculation. Unique design has extended measuring range with no exposed cables and rotates 360° for easy positioning of headpiece.



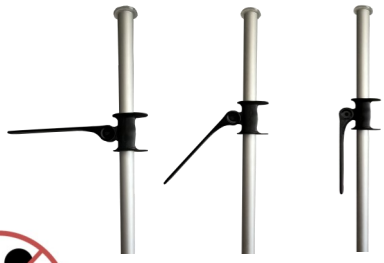

Measurement Slide has **Smart Position Technology** and stays where last left so it’s always ready to measure.

DUAL AXIS TIP-PROOF DESIGN *

Befour’s exclusive ‘dual axis tip-proof’ engineering offers rock-solid stability, in a free-standing design, producing an incredibly secure scale.

* Design reduces chance of tipping under normal usage.



BEFOUR

Befour Inc. | 102 Progress Drive, Saukville, WI 53080 | 800.367.7109 | f: 262.284.5966 | befour.com | sales@befour.com