DETECTO®

6550 PORTABLE WHEELCHAIR SCALES



Wi-Fi Bluetooth™

Wi-Fi/Bluetooth models available

NTEP · OIML · TAA COMPLIANT

Detecto Model 6550 Portable Wheelchair Scale with Column

Portable Wheelchair Scales with Time-Saving and Patient Comfort Benefits

- *NTEP and OIML certified for medical dosage accuracy*
- *USA made (of American and global components) and TAA compliant*
- *1,000 lb / 450 kg capacity with optional Wi-Fi*
- *Portable scale with vertical fold-up storage*
- *Two-way built-in ramps for accessibility from both sides*
- *Large 32 in x 36 in / 81 cm x 91 cm platform*
- *Ramps rest on the floor for easier patient access*

- Clinical-grade accuracy to 0.2 lb / 0.1 kg
- Quick and easy mobility for transport or storage
- Up to 99 tares (optional) to store wheelchair weights for efficient patient weighing
- Hold/Release key to hold weight after leaving the scale for better patient care
- Units locking into Kilograms or Pounds
- Patient ID barcode scanning sends 14-digit patient ID to indicator for EMR/EHR records



DS smart

EMR EHR ready

Welch Allyn® OPTIONAL

StableSENSE® DIGITAL FILTERING

Easily-Collapsible Column

With only one hand you can quickly slide the release lever and fold down the 6550's column for easy transport or vertical storage.

Low-Profile, Thin Platform

The platform is only 2.2 inches/56 mm high for easy patient accessibility and comfort while weighing either standing or in a wheelchair.

Single-Pass Weighing Saves Time

Enjoy the time-saving benefits of this scale, by using the convenient pushbutton or keypad tare to remove the wheelchair weight.

REQUIRES ONLY HALF THE EFFORT TO PULL WHEELCHAIR PATIENTS ONTO THE SCALE THAN COMPETITOR'S MODELS

The 6550's dual-access ramps go all the way to the ground and allow maximum convenience for loading and unloading patients from either side of the scale. These unique ramps require only half the effort for a healthcare professional to roll a wheelchair-bound patient onto the scale than competitor's models.

DETECTO®

2-WAY EASY TRANSPORT

The 6550 scale's column folds down and latches securely for easy transport in two directions made possible by the dual-direction wheels. DETECTO's 6550 vertical fold-up feature also equals minimal floor space for storage in an upright position when not in use.



IDEAL FOR USE IN MULTIPLE AREAS

DETECTO®

OPTIMUM PATIENT WEIGHING "ON-THE-MOVE"

One of the most popular medical scales in the industry, this ingeniously-designed scale offers a wide range of versatility. It can be used with wheelchairs, straight-legged chairs or as a stand-on scale. The 6550's 32 in x 36 in / 81 cm x 91 cm platform (flat portion) features 8-inch-long (20 cm) sloped ramps allowing access from either side. This lightweight digital fold-up scale is made for heavyweight tasks in patient care.

ONEWEIGH UNITS LOCKING



EFFICIENT MEASUREMENT:

The 6550's MedVue® weight indicator is the clinical industry's most advanced, featuring EMR/EHR-ready serial, USB, and Wi-Fi/Bluetooth connectivity (available on some models), BMI calculation, and a multiline LCD display. The scale is powered by 6 C batteries (not included) or AC adapter (included on some models).

DETECTO's 6550 scale features pushbutton and keypad tare for removing the wheelchair weight to display the actual patient weight.

6550

PORTABLE WHEELCHAIR SCALES



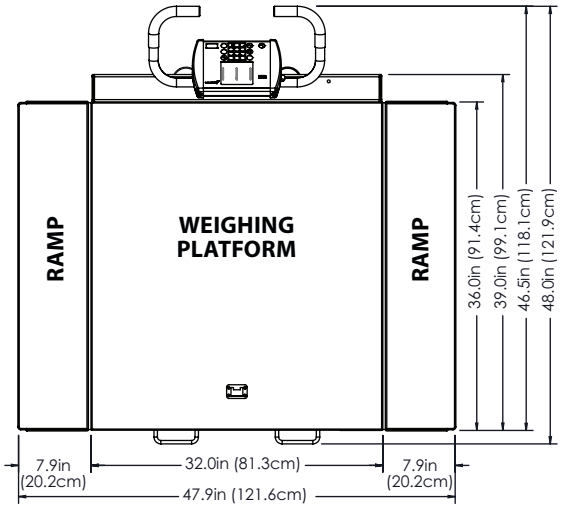

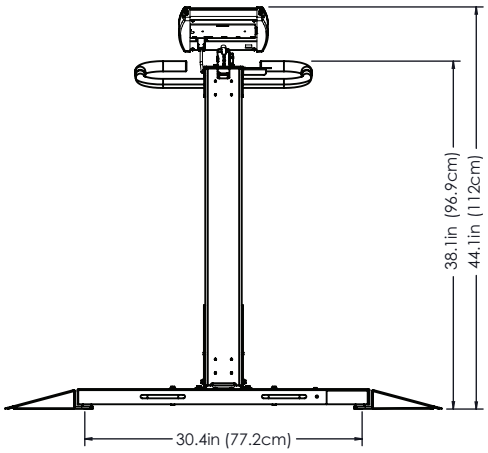

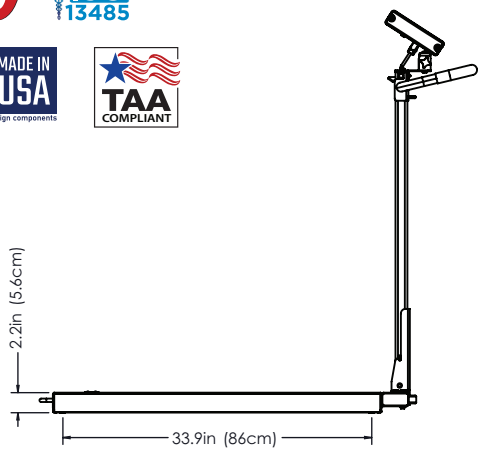

6550-AC Capacity **6550-C-AC**	1,000 lb x 0.2 lb / 450 kg x 0.1 kg Includes Wi-Fi/Bluetooth connectivity and AC adapter
6550KGEU Capacity	300 kg x 0.1 kg or 350 kg x 0.2 kg (OIML EC Class III)
Platform Size	32 in x 36 in / 81 cm x 91 cm
Display	Weight: 5-digit, 7-segment, 7/8 inch (22.2 mm) high LCD Height: 4-digit, 7-segment, 1/2 inch (12.7 mm) high LCD
Keyboard	Membrane type with 19 keys
Connectivity Ports	RS232 serial and USB standard. Ethernet is optional.
Display Dimensions	6.8 inch H x 7.6 inch W x 1.8 inch D (171.4 mm W x 193.8 mm H x 44.4 mm D)
Power	6 C cell Alkaline, Ni-Cad or NiMH batteries (not included) OR 12 VDC 1.25A wall plug-in AC power adapter, Detecto part number 6800-1045 (included)
Resolution	5,000 divisions, maximum
Operating Temperature	14º to 104º F (-10º to +40º C)
Net Weight	100 lb / 45 kg
Shipping Weight	120 lb / 54 kg

DETECTO reserves the right to improve, enhance, or modify features and specifications without prior notice.

DETECTO®

102 East Daugherty St., Webb City, MO 64870 USA
Toll-Free: (800) 441-2008 E-mail: detecto@cardet.com
www.detecto.com

SOLD BY:

© Copyright 2024 Cardinal Scale Mfg. Co. • Printed in USA • CAR/00/1024/C154K